ISA Transactions 80 (2018) 1–11

Contents lists available at ScienceDirect

ISA Transactions

journal homepage: www.elsevier.com/locate/isatrans

Research article

Discretization-based stabilization for a class of switched linear systems with communication delays☆

Pengfei Li[a,b,c], Yu Kang[a,b,c,*], Yun-Bo Zhao[d], Jiahu Qin[a], Weiguo Song[b]

[a] Department of Automation, University of Science and Technology of China, Hefei, 230027, China
[b] State Key Laboratory of Fire Science, University of Science and Technology of China, Hefei, 230027, China
[c] Institute of Advanced Technology, University of Science and Technology of China, Hefei, 230001, China
[d] College of Information Engineering, Zhejiang University of Technology, Hangzhou, 310023, China

ARTICLE INFO

Keywords:
Switched linear system
Sampled-data system
Hybrid system
Vector-valued switching signal

ABSTRACT

The stabilization problem for a class of switched linear systems is investigated in the network environment. Both the synchronous and asynchronous cases are considered according to the availability of the current activated system mode to the actuator. The random communication delay is assumed to be Markovian, resulting in a sampled-data synchronous or asynchronous switched system with Markovian delay as the closed-loop system. We extend the discretization approach to deal with such sampled-data system through exploring the stability conditions of the corresponding discrete-time system. For the asynchronous case, we formulate the closed-loop system as a hybrid system with the switching between its subsystems governed by a switching signal and a Markov chain. By studying the switching number and one-step reachable mode set of the constructed vector-valued switching signal, the exponential mean-square stability (EMSS) conditions and the corresponding mode-dependent controller are obtained with a more general constraint on the designed switching signal. These results are finally verified by two illustrated numerical examples.

1. Introduction

Stability is always the core issue for various control systems and the stability analysis is increasingly hard as the control system becomes more and more complex. For example, the switched system, which consists of a finite number of subsystems and a switching rule governing the switching among them, has been widely studied over the past decades, partly due to its ability to model many real-world processes and systems, see e.g. Refs. [1–4]. The state evolution of switched system is dependent on not only the initial conditions but also the switching rule [5], which makes the stability analysis for such system difficult. Another example is networked control system (NCS). The NCS refers to a type of feedback control systems, where the control loops are closed through communication networks [6–8]. The NCS has many advantages, such as low cost, simple installation and maintenance, and high reliability. However, due to the inherently unreliable network, the communication constraints including network-induced delays and packet losses, will degrade the system performance and complicate the stability analysis and design [9–12].

Recently, increasing attention has been paid to networked switched control system (NSCS), which is a special class of NCS with the plant being a switched linear system [13–16]. Synchronous case and asynchronous case, which are classified by the consistency of the system mode and controller mode, are both studied. For the synchronous case, where the current system mode and the activated controller mode are consistent [5], only the system states are transmitted through the network. When considering the delays and packet losses constraints, the overall NSCS can be represented as a synchronous switched system with delay, and the piecewise Lyapunov-Krasovskii functional (LKF) is the main tool to study this kind of system [17–21]. For example, the dwell time optimization problem for synchronous switching system with delays is formulated as a standard quasi-convex optimization problem by constructing a piecewise LKF and bounding its derivative through free-weighting matrices method in Ref. [21]. For the asynchronous case, suffered from the delays and packet losses, the received system mode at the controller side may be different from the current system mode. Obviously, the stability analysis for asynchronous case is much more challenging than the synchronous one. Asynchronous switching system approach [5,22], through analyzing the time derivatives of the constructed piecewise LKFs for both synchronous and asynchronous

☆ This work was supported in part by the National Natural Science Foundation of China (61725304, 61673361 and 61673350). Authors also gratefully acknowledge supports from the Youth Top-notch Talent Support Program, the 1000-talent Youth Program and the Youth Yangtze River Scholar.

* Corresponding author. Department of Automation, University of Science and Technology of China, Hefei, 230027, China.
E-mail addresses: puffylee@mail.ustc.edu.cn (P. Li), kangduyu@ustc.edu.cn (Y. Kang), ybzhao@zjut.edu.cn (Y.-B. Zhao), jhqin@ustc.edu.cn (J. Qin), wgsong@ustc.edu.cn (W. Song).

https://doi.org/10.1016/j.isatra.2018.04.015
Received 4 November 2016; Received in revised form 25 April 2018; Accepted 25 April 2018
Available online 01 June 2018
0019-0578/ © 2018 ISA. Published by Elsevier Ltd. All rights reserved.

intervals, is a popular and powerful approach to analyze the switched system with the asynchronous phenomena. With this approach, NSCS have been investigated in terms of the stability analysis [16,23,24], event-triggered control [25,26], observer-based control [27], etc. Different approaches can also bee seen. To name a few, in Ref. [28], the stability analysis for NSCS under asynchronous switching is derived by a novel Lyapunov function that considers the sojourn probability information of the switching signal; in Ref. [29], the authors propose a time-schedule Lyapunov function which is convergent during the asynchronous intervals, to study the fuzzy tracking control problem for a class of switched systems under asynchronous switching. In all of these works, including the synchronous and asynchronous cases, the delay is assumed to be time-varying with upper and lower bounds or simply a constant. However, the stability and stabilization problems for NSCS with Markovian delay have not been studied. Markovian delay is a typical class of time-varying delay which can characterize the randomness of the network more precisely. It is noting that the LKF-based approaches lead to a conservative result for the system with Markovian delay, because the transition probability of the delay cannot be well characterized by the constructed LKFs.

With the above inspiration, we study the stabilization problem for the NSCS where the communication delay is Markovian. The communication network is modeled similarly to that in Ref. [10], where the communication delay is Markovian and the control signal applied to the actuator at the sampling instant is always the latest. Then, according to the availability of the current system mode to the actuator, synchronous case and asynchronous case are both considered with their structures which are depicted in Figs. 1 and 2, respectively. Specifically, Fig. 1 indicates that the smart actuator knows the current system mode and by which to choose a matched control signal. In Fig. 2, the smart controller selects a right controller according to the delayed system mode, and this may make the controller mode and current system mode inconsistent. Under the above conditions, the resulting closed-loop systems can be modeled as sampled-data synchronous and asynchronous switched system with Markovian delay, respectively.

The main contributions of this paper are summarized as follows.

1) We extend the discretization approach, which is often applied to the stabilization issue for sampled-data linear or nonlinear system [30], to deal with the stabilization problem for the sampled-data synchronous and asynchronous switched system with Markovian delay. To be more specific, we first give the discretization system of the sampled-data switched system, then prove that the EMSS of the discretization system also implies the EMSS of the sampled-data one, and finally explore the stability criteria for the sampled-data system by studying the discretization system.

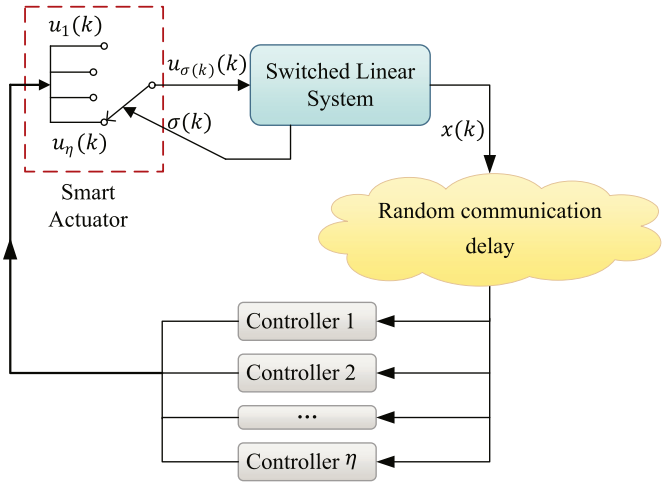

Fig. 1. System mode is available to the actuator.

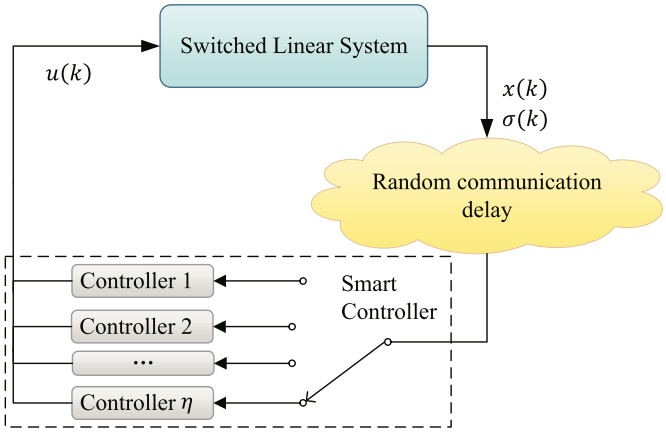

Fig. 2. System mode is unavailable to the actuator.

2) With state and mode augmentation technique, the closed-loop system can be formulated as a hybrid system, where the switching between its subsystem is governed by switching signal and Markov chain. However, the research for such hybrid system has seldom been reported. It is worth pointing out that with a similar approach, the current work differs from Ref. [15] mainly in the following two aspects: (*a*) The vector-valued switching signal in this work does not possess the Markov property. Hence, the switching number and one-step reachable mode set of the vector-valued switching signal are introduced as an alternative to the transition probability matrix of vector-valued Markov chain constructed in Ref. [15]. (*b*) The switching signal can be designed to guarantee the stability, while we cannot do that for Markov chain.
3) For the asynchronous case, motivated by Ref. [31], we study two scenarios that whether the instability of the closed-loop systems can or not be avoided during the asynchronous intervals. If not, we explore the EMSS criterion with a more relaxed constraint on the switching signal between the stable and unstable subsystems than that in Refs. [22,32].

The rest of the paper is organized as follows. Section 2 formulates the problems. In Section 3, the conditions to guarantee the EMSS of the closed-loop systems are presented first and the equivalent LMI conditions with matrix inversion constraints are derived to design the controller. Two numerical examples are shown in Section 4 to illustrate the effectiveness of the proposed results. Section 5 concludes the paper.

Notations. Throughout this paper the following notations are used. $\mathbb{N}$ denote the non-negative integer. $\mathbb{R}^n$ and $\mathbb{R}^{m\times n}$ denote the n-dimensional Euclidean space and the set of $m \times n$ real matrices, respectively. $\|\cdot\|$ refers to the Euclidean norm for vectors and the spectral norm for matrix. For symmetric matrix X, $X > 0$ ($X < 0$) means that X is positive definite (negative definite). $\lambda_{\max}(X)$ and $\lambda_{\min}(X)$ represent the maximum and minimum eigenvalues of X. I is the identity matrix with compatible dimensions. $E(\cdot)$ stands for the mathematical expectation operator.

2. Problem formulation

Consider the following continuous-time plant,

$$\dot{x}(t) = \tilde{A}_{\sigma(t)}x(t) + \widetilde{B}_{\sigma(t)}u(t), \quad x(0) = x_0 \tag{1}$$

where $x(t) \in \mathbb{R}^n$ and $u(t) \in \mathbb{R}^m$ are the system state and control input, respectively. $\tilde{A}_{\sigma(t)}$ and $\widetilde{B}_{\sigma(t)}$ are matrix functions of the switching signal $\{\sigma(t), t > 0\}$. For a switching time sequence $t_0 < t_1 < \ldots < t_l < \ldots$, the switching signal $\sigma(t)$ is a right-continuous, piecewise constant function, taking values from the finite discrete set $\mathcal{M} = \{1, 2, \ldots, \eta\}$.

Usually, digital controller and ZOH are applied in NCS, thus the

control input is piecewise constant

$$u(t) = u(k) \triangleq u(kT),\ \forall\, t \in [kT, (k+1)T),\ k \in \mathbb{N}$$

where $T > 0$ is a sampling period. In this case, system (1) is well known as a sampled-data switched system.

In the following statements, the below assumption is needed.

Assumption 1. *The switchings occur at the sampling time instant, that is, the switching time instants are integral multiple of the sampling period T.*

The assumption indicates that the sampled switching signal $\sigma(k) \triangleq \sigma(kT)$ characterizes all the features of $\sigma(t)$ such as switching instant, dwell time (DT), average dwell time (ADT), etc.

We use a similar model of the communication network as in Ref. [10]. Specifically, the sensor and the actuator are clock driven while the controller is event-triggered. A buffer which is omitted in Figs. 1 and 2, is located in the actuator and offers the latest control signals to the actuator. Besides, the communication delay $h(k)$ defined in this paper is also modeled as a discrete-time homogeneous Markov chain, which can sometimes characterize the randomness of the network more precisely compared with the general time-varying delay. We assume that the maximum delay is bounded, meaning $0 \le h(k) \le d$. Due to the function of choosing the latest control, the communication delay appears in the closed-loop system as an equivalent input delay $r(k)$ which is also a Markov chain and whose transition probabilities can be recalculated based on the transition probabilities of $h(k)$. The exact relationship between $h(k)$ and $r(k)$ and the recalculating method are discussed in detail in Ref. [10]. In the following discussion, we will give a specific description of Markov chain $r(k)$ and directly give its transition probabilities for convenience.

The Markov chain $r(k)$ defined on a complete probability space $(\Omega, \mathscr{F}, P)$ takes values in $\mathscr{S} = \{0, 1, 2, \ldots, d\}$ with known transition probability matrix $\Pi = (\pi_{ij}) \in \mathbb{R}^{s\times s}$, where

$$\pi_{ij} = P\{r(k+1) = j | r(k) = i\} \tag{2}$$

and $\pi_{ij} \ge 0$ and $\sum_{j=0}^{d} \pi_{ij} = 1$ for all $i, j \in \mathscr{S}$. Besides, as mentioned in Refs. [11,12], $\pi_{ij} = 0$ if $j > i + 1$.

Based on whether the current system mode is available to the actuator, the closed-loop systems can be written in different forms. If available, the structure is illustrated in Fig. 1. Since the number of the subsystems (or modes) is finite, each mode-dependent controller can calculate the control signal once receiving the sampled state $x(k) \triangleq x(kT)$, and lump them into one packet and then transmit it. The smart actuator which has the selecting function according to the current system mode $\sigma(k)$, selects a matched control signal. Thus, equivalently, we have the following mode-dependent state-feedback control law,

$$u(k) = K_{\sigma(k)} x(k - r(k)) \tag{3}$$

then the closed-loop system can be written as follows,

$$\begin{aligned} \dot{x}(t) &= \tilde{A}_{\sigma(t)} x(t) + \widetilde{B}_{\sigma(t)} K_{\sigma(k)} x(k - r(k)) \quad t \\ &\quad \in [kT, (k+1)T) \\ x(s) &= \phi(s),\ s \in \{-d, \ldots, 0\} \end{aligned} \tag{4}$$

where $\phi(s)$ is the given initial condition.

On the other hand, if the current system mode is unavailable to the actuator, in order to utilize the information of the system mode, both the system state and mode are sent to the remote controller, as shown in Fig. 2. According to the received system mode that suffered from the network-induced delay and packet losses, a corresponding controller is selected to compute the control signal. Thus, the mode-dependent state-feedback controller can be described by

$$u(k) = K_{\sigma(k-r(k))} x(k - r(k)). \tag{5}$$

Apply this controller to system (1), we obtain the following closed-loop system

$$\begin{aligned} \dot{x}(t) &= \tilde{A}_{\sigma(t)} x(t) + \widetilde{B}_{\sigma(t)} K_{\sigma(k-r(k))} x(k - r(k)) \quad t \\ &\quad \in [kT, (k+1)T) \\ x(s) &= \phi(s),\ \sigma(s) = \sigma_0,\ s \in \{-d, \ldots, 0\} \end{aligned} \tag{6}$$

where $\sigma_0 \in \mathscr{M}$ is the known initial mode of the switching signal.

In system (4), the current system mode and the controller mode are always the same, thus the name of "synchronous". On the other hand, in system (6) the system mode and controller mode may be inconsistent due to the Markovian delay, thus the name of "asynchronous". So in the following, we use the synchronous case and the asynchronous case to represent the above two cases.

Remark 1. In Figs. 1 and 2, the communication delay appears only in the S-C channel. Note that if the controller gain is delay-independent, this model can include the case where the communication delay appears in both S-C channel and C-A channel.

Remark 2. In Ref. [16], the network communication delay is assumed to be less than one sampling period. Such an assumption can be too strict. In our model, the equivalent input delay can be equal to one or more sampling periods. In Ref. [31], the stability of asynchronous switching systems is studied. Somewhat differently, only the system mode is affected by the time-varying delay, while both the system mode and state suffer from a Markovian delay in our problem setup.

The objective of this paper is to design the mode-dependent state-feedback controller and switching signal to guarantee the EMSS of the closed-loop system (4) and (6), respectively.

The following discrete-time switched system is obtained by discretizing each subsystem of the sampled-data system (4),

$$\begin{aligned} x(k+1) &= A_{\sigma(k)} x(k) + B_{\sigma(k)} K_{\sigma(k)} x(k - r(k)) \\ x(s) &= \phi(s),\ s \in \{-d, \ldots, 0\} \end{aligned} \tag{7}$$

where $A_{\sigma(k)} = e^{\tilde{A}_{\sigma(t)} T}$ and $B_{\sigma(k)} = \int_0^T e^{\tilde{A}_{\sigma(t)}(T-\tau)} \widetilde{B}_{\sigma(t)} d\tau$. Similarly, the discretized system of the sampled-data system (6) is given as follows,

$$\begin{aligned} x(k+1) &= A_{\sigma(k)} x(k) + B_{\sigma(k)} K_{\sigma(k-r(k))} x(k - r(k)) \\ x(s) &= \phi(s),\ \sigma(s) = \sigma_0,\ s \in \{-d, \ldots, 0\} \end{aligned} \tag{8}$$

Remark 3. The above discrete-time systems in (7) and (8) are obtained from (4) and (6) by standard discretization method [33], respectively. Lemma 1 in the following section indicates that the stability of sampled-date switched linear system and the discrete-time counterpart is equivalent under Assumption 1. Therefore, the exploration of the EMSS conditions for the sampled-data systems (4) and (6) is transferred equivalently into the discussion of the EMSS conditions for discrete-time systems (7) and (8), respectively.

Before proceeding, we need the following definitions.

Definition 1. *For switching signal $\sigma(k)$ and any $k_2 > k_1 \ge 0$, let $N_\sigma(k_2, k_1)$ be the switching number of $\sigma(k)$ over the interval $[k_1, k_2)$. If there exist two positive numbers N_0 and τ_a such that*

$$N_\sigma(k_2, k_1) \le N_0 + \frac{k_2 - k_1}{\tau_a}, \tag{9}$$

then, we say that $\sigma(k)$ has chatter bound N_0 and average dwell time τ_a.

Denoting the ADT of switching signal $\sigma(t)$ by $\widetilde{\tau}_a$. If the switching signal $\sigma(t)$ satisfies Assumption 1, then the relationship between $\widetilde{\tau}_a$ and τ_a, the ADT of sampled switching signal $\sigma(k)$, is $\widetilde{\tau}_a = T\tau_a$, where T is the sampling period.

Definition 2. *The system (4) or (6) is said to be EMSS, if for any initial state ϕ and any initial modes σ_0 and $r(0)$, there exist constants A_c, $B_c > 0$ such that*

$$E\{\|x(t)\|^2\} \le A_c |\phi|^2 e^{-B_c t}, \tag{10}$$

where $|\phi| = \max_{s\in\{-d,\ldots,0\}} \|\phi(s)\|$. Similarly, the discrete-time system (7) or (8) is said to be EMSS, if for the same initial conditions, there exist constants

A_d, $B_d > 0$ *such that*

$$E\{\|x(k)\|^2\} \le A_d|\phi|^2 e^{-B_d k}. \tag{11}$$

3. Main results

3.1. Preparations

For the **synchronous case**, by augmenting the state variable as

$$X(k) = [x^T(k)\ x^T(k-1)\ \dots\ x^T(k-d)]^T \tag{12}$$

the closed-loop system in (7) can be written as

$$\begin{aligned} X(k+1) &= (\bar{A}_{\sigma(k)} + \overline{B}_{\sigma(k)} K_{\sigma(k)} R_{r(k)}) X(k) \\ X(0) &= [\phi^T(0)\ \phi^T(-1)\ \dots\ \phi^T(-d)]^T \end{aligned} \tag{13}$$

where

$$\bar{A}_{\sigma(k)} = \begin{bmatrix} A_{\sigma(k)} & 0 & \dots & 0 & 0 \\ I & 0 & \dots & 0 & 0 \\ 0 & I & \dots & 0 & 0 \\ \vdots & \vdots & \ddots & \vdots & \vdots \\ 0 & 0 & \dots & I & 0 \end{bmatrix} \in \mathbb{R}^{n(1+d)\times n(1+d)},$$

$$\overline{B}_{\sigma(k)} = [B^T_{\sigma(k)}\ 0\ 0\ \dots\ 0]^T \in \mathbb{R}^{n(1+d)\times m},$$

$$R_{r(k)} = [0\ \dots\ 0\ I\ \dots\ 0] \in \mathbb{R}^{n\times(1+d)n}$$

and $R_{r(k)}$ has all elements being zeros except for the $(1 + r(k))$th block being identity.

The augment system (13) is a delay-free hybrid linear system possessing $d\eta$ operation modes with a Markovian jump parameter $r(k)$ and a switching parameter $\sigma(k)$.

For the **asynchronous case**, let $\sigma_k = \sigma(k)$, $\tilde{\sigma}_k = \tilde{\sigma}(k)$ and $r_k = r(k)$ for simplicity, and define the vector-valued switching signal $\tilde{\sigma}(k)$ and some matrix functions as follows,

$$\tilde{\sigma}(k) = [\sigma_k\ \ \sigma_{k-1}\ \ \dots\ \ \sigma_{k-d}]^T \tag{14}$$

$$\begin{aligned} A_{\tilde{\sigma}_k} &= A_{\sigma_k}, \quad B_{\tilde{\sigma}_k} = B_{\sigma_k} \\ \hat{K}_{\tilde{\sigma}_k} &= \left[K^T_{\sigma_k}\ \dots\ K^T_{\sigma_{k-r(k)}}\ \dots\ K^T_{\sigma_{k-d}}\right]^T. \end{aligned} \tag{15}$$

Moreover, define matrices S_{r_k} and R_{r_k} as follows,

$$\begin{aligned} S_{r_k} &= [0\dots0\ I\ 0\dots0] \in \mathbb{R}^{m\times(d+1)m} \\ R_{r_k} &= [0\dots0\ I\ 0\dots0] \in \mathbb{R}^{n\times(d+1)n} \end{aligned} \tag{16}$$

where S_{r_k} and R_{r_k} have all elements being zeros expect for the $(r_k + 1)$ th block being identity.

By introducing augmented state-vector $X(k)$ as (12), the closed-loop system in (8) can be written as

$$\begin{aligned} X(k+1) &= (\bar{A}_{\tilde{\sigma}_k} + \overline{B}_{\tilde{\sigma}_k} S_{r_k} \hat{K}_{\tilde{\sigma}_k} R_{r_k}) X(k) \\ X(0) &= [\phi(0)^T\ \phi(-1)^T\ \dots\ \phi(-d)^T]^T \end{aligned} \tag{17}$$

where

$$\bar{A}_{\tilde{\sigma}_k} = \begin{bmatrix} A_{\tilde{\sigma}_k} & 0 & \dots & 0 & 0 \\ I & 0 & \dots & 0 & 0 \\ 0 & I & \dots & 0 & 0 \\ \vdots & \vdots & \ddots & \vdots & \vdots \\ 0 & 0 & \dots & I & 0 \end{bmatrix} \in \mathbb{R}^{n(1+d)\times n(1+d)},$$

$$\overline{B}_{\tilde{\sigma}_k} = [B^T_{\tilde{\sigma}_k}\ 0\ 0\ \dots\ 0]^T \in \mathbb{R}^{n(1+d)\times m}$$

The augment systems of the discrete-time system (7) and (8) are given above respectively. In the following, we establish the relationships between the stability of sampled-data system and that of corresponding discrete-time system.

Lemma 1. *The sampled-data system (4) (or (6)) with Assumption 1 is EMSS if and only if the discrete-time system (7) (or (8)) is EMSS.*

Proof. Necessity is obvious and we address only sufficiency.

To prove the sufficiency, we take the sampled-data system (4) and the corresponding discrete-time system (7) for example. Without loss of generality, we assume $t_0 = k_0 = 0$. First, for all $t \in [kT, (k+1)T)$, we have

$$\|x(t)\| \le \rho\|X(k)\| \tag{18}$$

where ρ is a constant and $X(k)$ is defined in (12). In order to verify this result, matrix measure $\mu(A) \triangleq \lim_{t\to0^+} \frac{\|I+At\|-1}{t}$ is introduced [33], [34]. Note that $\forall\, i \in \mathscr{M}$, the bounding of transition matrix $\|e^{A_i t}\| \le e^{\mu(A_i)t}$, $\forall\, t \ge 0$ can be obtained by Coppel's inequality. Further, we have

$$\|e^{A_i(t-kT)}\| \le \rho_1 \triangleq \max\left\{\max_{i\in\mathscr{M}} e^{\mu(A_i)T},\ 1\right\} \tag{19}$$

for all $t \in [kT, (k+1)T)$. Assumption 1 guarantees that no switchings occur during the interval $t \in [kT, (k+1)T)$. Thus, we have

$$\begin{aligned} \|x(t)\| &= \|e^{A_i(t-kT)}x(kT) + \textstyle\int_{kT}^{t} e^{A_i(t-\tau)}B_iK_i d\tau x(k-r(k))\| \\ &\le \|e^{A_i(t-kT)}\|\|x(k)\| + \textstyle\int_{kT}^{t} \|e^{A_i(t-\tau)}\|\|B_iK_i\|d\tau\|x(k-r(k))\| \\ &\le \rho_1\|x(k)\| + \rho_2\|x(k-r(k))\| \\ &\le \rho\|X(k)\| \end{aligned}$$

for all $t \in [kT, (k+1)T)$, where $\rho_2 = \rho_1 T \max_{i\in\mathscr{M}}\|B_iK_i\|$ and $\rho = \max\{\rho_1, \rho_2\}$.

On the other hand, it is easy to see that the EMSS of the discrete-time system (7) implies the EMSS of the augmented system (13). Thus, if the corresponding discrete-time system (7) is EMSS, from (28) and (18), the following equalities hold for any $t \in [kT, (k+1)T)$, $k \ge 0$.

$$\begin{aligned} E\{\|x(t)\|^2\} &\le \rho^2 E\{\|X(k)\|^2\} \\ &\le \rho^2 A_d e^{-B_d k}(d+1)|\phi|^2 \\ &\le (1+d)\rho^2 A_d|\phi|^2 e^{-B_d\frac{t-T}{T}} \\ &= A_c|\phi|^2 e^{-B_c t} \end{aligned}$$

where $A_c = (1+d)\rho^2 A_d e^{B_d}$ and $B_c = \frac{B_d}{T}$. The third inequality holds because of $t \le (k+1)T$. This means the EMSS of the system (4).

For sampled-data system (6) and discrete-time system (8), except for $\rho_2 = \rho_1 T \max_{i\in\mathscr{M}}\max_{j\in\mathscr{M}}\|B_iK_j\|$, we can take the same proof as above to get the results. This completes the proof.

Remark 4. To establish the relationships between the stability of sampled-data system and that of corresponding discrete-time system is no easy task [30]. It is well known that an equivalence relationship holds for linear sampled-data system [12,35], but it usually does not hold for general switched linear system, since the characteristics of the switching signal $\sigma(t)$ (e.g. ADT) is usually not retained under sampling. In our present work, Assumption 1 ensures the precise reconstruction of the switching signal $\sigma(t)$ by the sampled switching signal $\sigma(k)$, and consequently guarantees the equivalence. To find a relaxed constraint between $\sigma(t)$ and $\sigma(k)$ that guarantees the equivalence is an interesting problem and still needs further investigations.

3.2. The synchronous case

With Definition 2 and Lemma 1, the sufficient condition of the EMSS for closed-loop system in (4) or (7) can be obtained.

Theorem 1. *Consider the closed-loop system in (4), and let $\mu > 1$ and $0 < \alpha < 1$ be given constants. If there exist symmetric matrices $P(m, i) > 0$ such that for all $m, n \in \mathscr{M}$, $i, j \in \mathscr{S}$, the following inequalities hold*

$$\textstyle\sum_{j=0}^{d} \pi_{ij}\hat{A}^T_{m,i}P(m,j)\hat{A}_{m,i} < (1-\alpha)P(m,i) \tag{20}$$

$$P(m,j) - \mu P(n,j) \le 0 \tag{21}$$

where $\hat{A}_{m,i} = \bar{A}_m + \overline{B}_m K_m R_i$, then the system is EMSS for any switching

signals with ADT satisfying

$$\tau_a > \tau_a^* = -\frac{\ln \mu}{\ln(1-\alpha)}. \tag{22}$$

Proof. For the closed-loop system in (13), construct the following Lyapunov function,

$$V(X(k), k) = X^T(k)P(\sigma(k), r(k))X(k) \tag{23}$$

Notice that

$$\beta_1 \|X(k)\|^2 \le V(X(k), k) \le \beta_2 \|X(k)\|^2, \tag{24}$$

where

$$\beta_1 = \inf_{m\in\mathscr{M}} \inf_{i\in\mathscr{S}} \lambda_{\min}(P(m, i)),$$

and

$$\beta_2 = \sup_{m\in\mathscr{M}} \sup_{i\in\mathscr{S}} \lambda_{\max}(P(m, i)).$$

Denote $k_1, k_2, \ldots, k_l, \ldots$ the switching time sequence of $\sigma(k)$. Assume $\sigma(k) = m$ for any $k \in [k_l, k_{l+1})$ and $r(k) = i$, we have

$$\begin{aligned} &E\{X^T(k+1)P(\sigma(k_l), r(k+1))X(k+1)|r(k) = i\} - V(X(k), k) \\ &\quad = \textstyle\sum_{j=0}^{d} \pi_{ij} X^T(k+1)P(m, j)X(k+1) - X(k)P(m, i)X(k) \\ &\quad = X^T(k)\Big[\textstyle\sum_{j=0}^{d} \pi_{ij} \hat{\mathrm{A}}_{m,i}^T P(m, j)\hat{\mathrm{A}}_{m,i} - P(m, i)\Big]X(k) \\ &\quad < -\alpha X^T(k)P(m, i)X(k), \end{aligned} \tag{25}$$

the last inequality holds because of the formula (20). In fact, from the above inequality, if $k = k_{l+1} - 1$, then, we have

$$\begin{aligned} &E\{X^T(k_{l+1})P(\sigma(k_l), r(k_{l+1}))X(k_{l+1}))\} \\ &<(1-\alpha)E\{V(X(k_{l+1}-1), k_{l+1}-1)\}; \end{aligned}$$

and if $k_l \le k < k_{l+1} - 1$, then,

$$E\{V(X(k+1), k+1\} < (1-\alpha)E\{V(X(k), k)\}$$

Iteratively it yields that

$$\begin{aligned} &E\{X^T(k)P(\sigma(k_l), r(k))X(k))\} \\ &<(1-\alpha)^{k-k_l}E\{X^T(k_l)P(\sigma(k_l), r(k_l))X(k_l))\} \end{aligned} \tag{26}$$

for $k \in (k_l, k_{l+1}]$.

Next, let $\sigma(k_l) = m$, $\sigma(k_{l-1}) = n$ and $r(k) = i$, $r(k_l) = j$, $r(k_{l-1}) = s$. Let l represents the switching number during $[k_0, k]$, where k_0 is the initial time, then $l \le N_0 + \frac{k-k_0}{\tau_a}$. Here and in what follows, if not specified, we let $k_0 = 0$. For any $k \in [k_l, k_{l+1})$, we have

$$\begin{aligned} E\{X^T(k)P(m, i)X(k)\} &\le (1-\alpha)^{k-k_l}E\{X^T(k_l)P(m, j)X(k_l)\} \\ &\le (1-\alpha)^{k-k_l}\mu E\{X^T(k_l)P(n, j)X(k_l)\} \\ &<(1-\alpha)^{k-k_{l-1}}\mu E\{X^T(k_{l-1})P(n, s)X(k_{l-1})\} \\ &\quad\cdots \\ &<(1-\alpha)^k\mu^l X^T(0)P(\sigma(0), r(0))X(0) \\ &\le \beta_2\mu^{N_0}[(1-\alpha)\mu^{1/\tau_a}]^k\|X(0)\|^2 \end{aligned} \tag{27}$$

Formula (22) implies $(1-\alpha)\mu^{1/\tau_a} < 1$. Thus, there exists a positive constant B_d such that $\ln((1-\alpha)\mu^{1/\tau_a}) < -B_d < 0$. Combining (12) with (24), we have

$$E\{\|X(k)\|^2\} \le A_{d1}e^{-B_d k}\|X(0)\|^2 \tag{28}$$

where $A_{d1} = \mu^{N_0}\beta_2/\beta_1$. In fact, we have $E\{\|x(k)\|^2\} \le E\{\|X(k)\|^2\}$ and $\|X(0)\|^2 \le (d+1)|\phi|^2$, then

$$E\{\|x(k)\|^2\} \le A_d|\phi|^2 e^{-B_d k} \tag{29}$$

is immediately obtained with $A_d = (d+1)A_{d1}$, which means that the system (7) is EMSS and also system (4) is EMSS due to Lemma 1. This completes the proof.

For given ADT τ_a, Theorem 1 can be used to check the EMSS of the closed-loop system (4). Besides, Theorem 1 also gives a guidance to the design of the switching signal to guarantee EMSS of the system. From the following corollary, the co-design of controller (3) and the switching signal can be achieved by tuning the value of α and μ.

Corollary 1. *Consider the closed-loop system (4) and let $0 < \alpha < 1$ and $\mu > 1$ be given constants. If there exist matrices $P(m, i) > 0, Z(m, i) > 0$, such that the following inequalities*

$$\begin{bmatrix} -(1-\alpha)P(m, i) & (\bar{\mathrm{A}}_m + \bar{B}_m K_m R_i)^T \\ * & Z(m, i) \end{bmatrix} < 0 \tag{30}$$

and (21) hold with the constraints

$$\left[\sum_{j=0}^{d} \pi_{ij} P(m, j)\right] Z(m, i) = I \tag{31}$$

for all $m, n \in \mathscr{M}$ and $i \in \mathscr{S}$, then there exists controller (3) such that the system (4) is EMSS for any switching signals with ADT satisfying (22).

Proof 3. Let $Z(m, i) = P(m,i)^{-1}$, (30) can be obtained immediately from (20) by the Schur complement lemma. This completes the proof.

3.3. The asynchronous case

The following lemma on the vector-valued switching signal is useful for the following analysis.

Lemma 2. *([14]) Let $d \in \mathbb{N}$ and define the following two sets $\mathscr{M}^{d+1} \triangleq \mathscr{M} \times \mathscr{M} \times \cdots \times \mathscr{M}$ with $\mathscr{M} = \{1, 2, \ldots, \eta\}$ and $\mathscr{M}_{d+1} \triangleq \{1, 2, \ldots, \eta^{d+1}\}$. Then, introduce the mapping φ: $\mathscr{M}^{d+1} \to \mathscr{M}_{d+1}$ with*

$$\begin{aligned} \varphi(\widetilde{\sigma}_k) &= (\sigma_{k-d} - 1)\eta^d + (\sigma_{k-d+1} - 1)\eta^{d-1} + \ldots \\ &\quad + (\sigma_{k-1} - 1)\eta + \sigma_k, \end{aligned} \tag{32}$$

where $\widetilde{\sigma}_k \in \mathscr{M}^{d+1}$. The mapping $\varphi(\cdot)$ is a bijection from $\mathscr{M}^{d+1}$ to $\mathscr{M}_{d+1}$. Denote $\varphi^{-1}(\cdot)$ as its inverse mapping.

This lemma establishes the equivalence relation between $\widetilde{\sigma}_k$ and $\varphi(\widetilde{\sigma}_k)$. Next, we will explore the relationship of switching number between $\widetilde{\sigma}_k$ and σ_k.

Lemma 3. *Denote $\widetilde{l}$ and l as the switching number of $\widetilde{\sigma}_k$ and σ_k over the same time interval, respectively. Then, we have the following relationship between $\widetilde{l}$ and l,*

$$\widetilde{l} \le (d+1)l. \tag{33}$$

Proof. Assume that the switching signal σ_k switches l times during interval $[k_a, k_b]$, we have the following formulas

$$\begin{aligned} N_{\sigma_k}(k_b, k_a) &\le l \\ N_{\sigma_{k-1}}(k_b, k_a) &\le l \\ &\cdots \\ N_{\sigma_{k-d}}(k_b, k_a) &\le l. \end{aligned}$$

Then,

$$\widetilde{l} = N_{\widetilde{\sigma}_k}(k_b, k_a) \le \sum_{i=0}^{d} N_{\sigma_{k-i}}(k_b, k_a) \le (d+1)l.$$

This completes the proof.

Assume $\widetilde{\sigma}_k = [i_0\ i_{-1}\ldots i_{-d}]^T$, $\widetilde{\sigma}_{k+1} = [j_0\ j_{-1}\ldots j_{-d}]^T$, $p = \varphi(\widetilde{\sigma}_k)$, $q = \varphi(\widetilde{\sigma}_{k+1})$, and notice that $j_{-1} = i_0, j_{-2} = i_{-1}, \ldots, j_{-d} = i_{-d+1}$. Since $\widetilde{\sigma}_{k+1}$ and $\widetilde{\sigma}_k$ have d common elements, once the value of $\widetilde{\sigma}_k$ is given, $\widetilde{\sigma}_{k+1}$ cannot be any value in $\mathscr{M}^{d+1}$, and vice versa. In other words, the value of p and q depends on each other a lot. For instants, Let $\gamma = (i_0 - 1)\eta + (i_{-1} - 1)\eta^2 + \cdots + (i_{-d+1} - 1)\eta^d$, then $q = \gamma + j_0$, where γ depends entirely on p or $\widetilde{\sigma}_k$. Thus, we define the one-step reachable mode set $\mathscr{Q}(p)$, in which each mode can be switched from mode p in one time step, then this set can be expressed as

$$\mathscr{Q}(p) = \{q, q \in \mathscr{M}_{d+1} | q = \gamma + j_0, \forall\, j_0 \in \mathscr{M}\} \tag{34}$$

Based on all these preparatory work, we derive the main results as

follows.

Theorem 2. *Consider the closed-loop system in (6), and let $\mu > 1$ and $0 < \alpha < 1$ be given constants. If there exist symmetric matrices $P(q, i) > 0$ such that, for all $q \in \mathscr{M}_{d+1}$, $p \in \mathscr{Q}(q)$, $i, j \in \mathscr{S}$*

$$\sum_{j=0}^{d} \pi_{ij} \hat{\mathrm{A}}_{u,v,i}^{T} P(q, j) \hat{\mathrm{A}}_{u,v,i} - (1-\alpha) P(q, i) < 0 \tag{35}$$

$$P(p, j) - \mu P(q, j) \le 0 \tag{36}$$

where $\hat{\mathrm{A}}_{u,v,i} = \bar{\mathrm{A}}_u + \overline{B}_u K_v R_i$, u and v are the 1st and $(i+1)$th element of $\varphi^{-1}(q)$, then the system is EMSS for any switching signals with the ADT satisfying

$$\tau_a > \tau_a^* = -\frac{(d+1)\ln \mu}{\ln(1-\alpha)}. \tag{37}$$

Proof. For the closed-loop system in (17), take the Lyapunov function as

$$V(X(k), k) = X^T(k) P(\varphi(\widetilde{\sigma}_k), r_k) X(k). \tag{38}$$

Then,

$$\beta_1 \|X(k)\|^2 \le V(X(k), k) \le \beta_2 \|X(k)\|^2 \tag{39}$$

with

$$\beta_1 = \inf_{q \in \mathscr{M}_{d+1}} \inf_{i \in \mathscr{S}} \lambda_{\min}(P(q, i))$$

and

$$\beta_2 = \sup_{q \in \mathscr{M}_{d+1}} \sup_{i \in \mathscr{S}} \lambda_{\max}(P(q, i))$$

Let $k_1, k_2, \ldots, k_{\tilde{l}}, \ldots$ be a set of switching time instants of $\widetilde{\sigma}_k$. Following the example of Theorem 1, we obtain

$$\begin{aligned} &E\{X^T(k) P(\widetilde{\sigma}(k_{\tilde{l}}), r(k)) X(k)\} \\ <&(1-\alpha)^{k-k_{\tilde{l}}} E\{X^T(k_{\tilde{l}}) P(\widetilde{\sigma}(k_{\tilde{l}}), r(k_{\tilde{l}})) X(k_{\tilde{l}})\} \end{aligned} \tag{40}$$

for $k \in (k_{\tilde{l}}, k_{\tilde{l}+1}]$.

Suppose that $\varphi(\widetilde{\sigma}_{k_{\tilde{l}}}) = q$, $\varphi(\widetilde{\sigma}_{k_{\tilde{l}-1}}) = p$, $r_k = i$, $r_{k_{\tilde{l}}} = j$ and $r_{k_{\tilde{l}-1}} = s$, where $q \in \mathscr{Q}(p)$. Imitate the proof of Theorem 1, the following inequalities

$$\begin{aligned} E\{X^T(k) P(q, i) X(k)\} &\le (1-\alpha)^{k-k_{\tilde{l}}} E\{X^T(k_{\tilde{l}}) P(q, j) X(k_{\tilde{l}})\} \\ &\le (1-\alpha)^{k-k_{\tilde{l}}} \mu E\{X^T(k_{\tilde{l}}) P(p, j) X(k_{\tilde{l}})\} \\ &< (1-\alpha)^{k-k_{\tilde{l}}-1} \mu E\{X^T(k_{\tilde{l}-1}) P(p, s) X(k_{\tilde{l}-1})\} \\ &\cdots \\ &< (1-\alpha)^k \mu^{\tilde{l}} X^T(0) P(\varphi(\widetilde{\sigma}_0), r_0) X(0) \\ &\le (1-\alpha)^k \mu^{(d+1)l} X^T(0) P(\varphi(\widetilde{\sigma}_0), r_0) X(0) \\ &\le \beta_2 \mu^{(d+1)N_0} [(1-\alpha)\mu^{(d+1)/\tau_a}]^k \|X(0)\|^2 \end{aligned} \tag{41}$$

hold for all $k \in [k_{\tilde{l}}, k_{\tilde{l}+1})$. Together with (37) and Lemma 1, we can easily show the EMSS for system (6). This completes the proof.

Remark 5. In Ref. [15], the stabilization problem for networked Markovian jump system was studied via the introduced vector-valued Markov chain. Thanks to the Markov property, the transition probability matrix of the vector-valued Markov chain was obtained and then the corresponding stability results were derived. Nevertheless, this method is not applicable, because the vector-valued switching signal does not possess a similar property. Instead, Lemma 3 and one-step reachable mode set are introduced to derive the stability results.

In the following, we give the mode-dependent controller design method based on Theorem 2 directly.

Corollary 2. *Consider the closed-loop system (6) and let $0 < \alpha < 1$ and $\mu > 1$ be given constants. If there exist matrices $P(q, i) > 0$, $Z(q, i) > 0$, such that (36) and*

$$\begin{bmatrix} -(1-\alpha) P(q, i) & (\bar{\mathrm{A}}_u + \overline{B}_u K_v R_i)^T \\ * & Z(q, i) \end{bmatrix} < 0 \tag{42}$$

hold with the following constraints

$$\left[\sum_{j=0}^{d} \pi_{ij} P(q, j)\right] Z(q, i) = I \tag{43}$$

where $i, j \in \mathscr{S}$, $q \in \mathscr{M}_{d+1}$, u and v are the 1st and $(i+1)$ th element of $\varphi^{-1}(q)$, then there exist a set of controllers such that the system (6) is EMSS for any switching signals with the ADT satisfying (37).

Let $\mathscr{T}^-(k)$ be the matched time interval (or synchronous interval), during which the current system mode u and delayed controller mode v are the same, while $\mathscr{T}^+(k)$ as the unmatched time interval (or asynchronous interval) with $u \neq v$. From Theorem 2 and Corollary 2, we notice that any one of the controllers can stabilize system (8) exponentially in the mean square sense with the decay rate $1-\alpha$ during both $\mathscr{T}^-(k)$ and $\mathscr{T}^+(k)$. That is to say the instability can be avoided during the asynchronous interval. However, this requirement may be too strict to satisfy. In fact, based on the switched system theory, we can stabilize the switched system with stable and unstable subsystems by choosing an appropriate switching signal. If we only require that the augment system (17) is stable in matched interval but not the stability in unmatched interval, we have the following theorem to guarantee the EMSS.

Theorem 3. *Consider the closed-loop system in (6), and let $\mu > 1$, $0 < \alpha^- < 1$ and $\alpha^+ > 0$ be given constants. If there exists a constant $k_0' \in \mathbb{N}$ and symmetric matrices $P(q, i) > 0$ such that (36),*

$$\sum_{j=0}^{d} \pi_{ij} \hat{\mathrm{A}}_{u,v,i}^{T} P(q, j) \hat{\mathrm{A}}_{u,v,i} < \begin{cases} (1-\alpha^-) P(q, i) & \text{if} \quad u = v \\ (1+\alpha^+) P(q, i) & \text{if} \quad u \neq v \end{cases} \tag{44}$$

hold, where $\hat{\mathrm{A}}_{u,v,i} = \bar{\mathrm{A}}_u + \overline{B}_u K_v R_i$, $i, j \in \mathscr{S}$, $q \in \mathscr{M}_{d+1}$, u and v are the 1st and $(i+1)$ th element of $\varphi^{-1}(q)$, then the system is EMSS for any switching signals satisfying

$$\inf_{k > 0} \frac{T^-(k + k_0') - T^-(k_0')}{T^+(k + k_0') - T^+(k_0')} \ge \frac{\ln \gamma^+ - \ln a}{\ln a - \ln \gamma^-} \tag{45}$$

and (37), where $0 < \gamma^- < a < 1$, $\gamma^- = (1-\alpha^-)\mu^{\frac{d+1}{\tau_a}}$, $\gamma^+ = (1+\alpha^+)\mu^{\frac{d+1}{\tau_a}}$, and $T^-(k)$ (or $T^+(k)$) represents the total length of the activation time during which Lyapunov function is decreasing (or not decreasing).

Proof. The proof follows (40) in Theorem 2, where α is replaced by $-\alpha^+$ and α^-, respectively. Without loss of generality, we assume that $u = v$ in $[k_{\tilde{l}}, k]$ where $k \in [k_{\tilde{l}}, k_{\tilde{l}+1})$ and $u \neq v$ in interval $[k_{\tilde{l}-1}, k_{\tilde{l}})$, $\varphi(\widetilde{\sigma}_{k_{\tilde{l}}}) = q$, $\varphi(\widetilde{\sigma}_{k_{\tilde{l}-1}}) = p$, $r_k = i$, $r_{k_{\tilde{l}}} = j$ and $r_{k_{\tilde{l}-1}} = s$, where $q \in \mathscr{Q}(p)$. In light of (27) and Lemma 3. Then

$$\begin{aligned} E\{X^T(k) P(q, i) X(k)\} &< (1-\alpha^-)^{k-k_{\tilde{l}}} E\{X^T(k_{\tilde{l}}) P(q, j) X(k_{\tilde{l}})\} \\ &\le (1-\alpha^-)^{k-k_{\tilde{l}}} \mu E\{X^T(k_{\tilde{l}}) P(p, j) X(k_{\tilde{l}})\} \\ &< (1-\alpha^-)^{k-k_{\tilde{l}}} (1+\alpha^+)^{k_{\tilde{l}}-k_{\tilde{l}-1}} \mu E\{X^T(k_{\tilde{l}-1}) P(p, s) X(k_{\tilde{l}-1})\} \\ &\cdots \\ &< (1-\alpha^-)^{T^-(k)} (1+\alpha^+)^{T^+(k)} \mu^{\tilde{l}} X^T(0) P(\varphi(\widetilde{\sigma}_0), r_0) X(0) \\ &\le \beta_2 (1-\alpha^-)^{T^-(k)} (1+\alpha^+)^{T^+(k)} \mu^{(d+1)l} \|X(0)\|^2 \\ &\le \beta_3 (1-\alpha^-)^{T^-(k)} (1+\alpha^+)^{T^+(k)} \mu^{(d+1)k/\tau_a} \|X(0)\|^2 \end{aligned} \tag{46}$$

where $\beta_3 = \beta_2 \mu^{(d+1)N_0}$.

Note that $T^+(k) + T^-(k) = k$ with $T^+(k), T^-(k) \ge 0$ and $T^+(0) = T^-(0) = 0$, then (45) implies

$$\begin{aligned} &T^+(k + k_0')\ln \gamma^+ + T^-(k + k_0')\ln \gamma^- \\ &\le k \ln a + T^+(k_0')\ln \gamma^+ + T^-(k_0')\ln \gamma^- \\ &\le k \ln a + k_0' \ln \gamma^+ \end{aligned} \tag{47}$$

which is equivalent to

$$T^+(k')\ln \gamma^+ + T^-(k')\ln \gamma^- \le k' \ln a + k_0' b \tag{48}$$

with $b = \ln \gamma^+ - \ln a$, $\forall k' > k'_0$. Notice that $T^+(k') \ln \gamma^+ + T^-(k') \ln \gamma^- \le k'_0 \ln \gamma^+ \le k' \ln a + k'_0 b$, for all $k' \in [0, k'_0]$, so we can conclude

that

$$T^+(k)\ln\gamma^+ + T^-(k)\ln\gamma^- \le k\ln a + k_0' b \tag{49}$$

holds for all $k \ge 0$. Together with (46) and Lemma 1, we can easily obtain the EMSS of system (6). This completes the proof.

Remark 6. . In most existing literatures about switching among stable and unstable subsystems, the switching signal is required to satisfy (45) with $k'_0 = 0$ [22,32,36]. Obviously, (45) is a more general condition, which means that after some instant $k'_0 \ge 0$, the ratio of activated time of stable subsystems and unstable subsystems during $(k'_0, k]$ is required to satisfy a certain lower bound. Besides, this condition also means that the function $T^+(k)\ln\gamma^+ + T^-(k)\ln\gamma^-$ below a linear function with negative slope $\ln a$.

In a similar way, we give the following corollary without proof.

Corollary 3. *Consider the closed-loop system (6) and let $0 < \alpha^- < 1$, $\alpha^+ > 0$ and $\mu > 1$ be given constants. If there exist matrices $P(q,i) > 0, Z(q,i) > 0$, such that (36) and*

$$\begin{bmatrix} -(1-\alpha^-)P(q,i) & (\bar{A}_u + \bar{B}_u K_v R_i)^T \\ * & -Z(q,i) \end{bmatrix} < 0 \quad \text{if} \quad u = v$$
$$\begin{bmatrix} -(1+\alpha^+)P(q,i) & (\bar{A}_u + \bar{B}_u K_v R_i)^T \\ * & -Z(q,i) \end{bmatrix} < 0 \quad \text{if} \quad u \ne v \tag{50}$$

hold with the constraints (43), where $i, j \in \mathscr{S}$, $q \in \mathscr{M}_{d+1}$, u and v are the 1st and $(i+1)$ th element of $\varphi^{-1}(q)$, then there exist a set of controllers such that the system (6) is EMSS for any switching signals satisfying (37) and (45).

Remark 7. The conditions stated in Corollary 1 ~ 3 are a set of LMIs with some matrix inversion constraints, and the cone complementarity linearization (CCL) algorithm is often used to solve this kind of problems [37,38]. We give in Appendix a flowchart of the iterative algorithm that can be solved using MATLAB Toolbox.

Remark 8. A given switching signal determines the ADT. By adjusting properly the parameters μ and α, the stability of closed-loop system can be verified by Theorem 1 ~ 3. When it comes to the co-design of the controller and the switching signal, Corollary 1 ~ 3 can be useful. Take Corollary 1 as an example. If the iterative algorithm is infeasible when α is given, a possible method is to increase μ since (21) can be easily satisfied by doing so. This also results in the increase of ADT τ^*. Besides, if we focus only on the stability but not the speed of convergence, reducing the exponential decay rate α to enlarge the solution domain is also a good approach.

4. Illustrative examples

Two examples are considered to illustrate the effectiveness of the proposed method. Note that: 1) In the examples the designed switching signal $\sigma(t)$ must meet Assumption 1; 2) $\widetilde{\tau}_a = T\tau_a$, where T is the sampling period, and $\widetilde{\tau}_a$ and τ_a are the ADT of $\sigma(t)$ and the corresponding sampled switching signal $\sigma(k)$, respectively.

Example 1. Consider the continuous-time switched linear system,

$$\tilde{A}_1 = \begin{bmatrix} a_1 & 2.5 \\ 1.5 & -2.9 \end{bmatrix}, \ \tilde{A}_2 = \begin{bmatrix} a_2 & -1.9 \\ 2.5 & -1.1 \end{bmatrix}, \ \widetilde{B}_1 = \begin{bmatrix} 0.1 \\ 0.3 \end{bmatrix}, \ \widetilde{B}_2 = \begin{bmatrix} 0 \\ 0.1 \end{bmatrix},$$

where a_1 can be -0.8 or 1.4, a_2 can be -2.0 or -10.0, respectively. For both scenarios, $\tilde{A}_1$ has positive eigenvalues. Assume that the equivalent input delay $r(k) \in \{0, 1, 2\}$, i.e., $d = 2$. The transition probability matrix Π is taken as follows

$$\Pi = \begin{bmatrix} 0.6 & 0.4 & 0 \\ 0.4 & 0.5 & 0.1 \\ 0.3 & 0.3 & 0.4 \end{bmatrix}.$$

Fig. 3 is one of the possible realization of the Markovian delay $r(k)$.

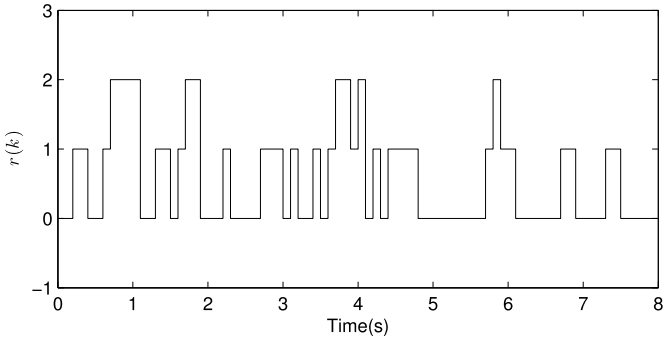

Fig. 3. The Markovian delay $r(k)$.

Take $a_1 = 1.4$ and $a_2 = -2.0$ for example, the discretization system can be written as follows for $T = 0.1s$,

$$A_1 = \begin{bmatrix} 1.1691 & 0.2352 \\ 0.1411 & 0.7646 \end{bmatrix}, \quad A_2 = \begin{bmatrix} 0.8389 & -0.1641 \\ -0.2159 & 0.9166 \end{bmatrix},$$
$$B_1 = \begin{bmatrix} 0.0144 \\ 0.0269 \end{bmatrix}, \quad B_2 = \begin{bmatrix} -0.0009 \\ 0.0095 \end{bmatrix}.$$

In this example, we consider only the asynchronous case and solve the corresponding stabilization problem. Our goals are twofold, 1) design the mode-dependent controllers and switching signal to stabilize the switched system, and further make a comparison between the result of Corollary 2 and that in Ref. [31]; 2) show that if the design process can not be completed by Corollary 2, we can resort to Corollary 3, i.e. Corollary 3 is a more general result. Note that the control gains in this example can be calculated using the LMI toolbox in MATLAB. The detailed realization is discussed in Remark 7 and the Appendix.

For the first goal, in order to show the superiority of our method, we compare our result with that in Ref. [31]. So we first extend the result of Theorem 2 in Ref. [31] to our problem settings. Specifically, Equation (15) and Equation (16) in Ref. [31] are replaced by

$$\begin{bmatrix} -P(v,i) & \bar{A}_u + \bar{B}_u K_v R_i + \alpha' I \\ * & -Z(v,i) \end{bmatrix} < 0$$
$$P(v,i)Z(v,i) = I \tag{51}$$

and

$$\tau_a > \tau_a^* = -\frac{2\ln\mu'}{\ln(1-\alpha')}, \tag{52}$$

respectively. Notice that for the same decay rate, we have $\alpha' = 1 - \sqrt{1-\alpha}$, where α is given in Theorem 1 ~3. (51) says that each K_v will stabilize exponentially all subsystems for arbitrary delay no large than d.

Here, we consider $a_2 = -10.0$ and a_1 can be -0.8 or 1.4. The computation results for the system are listed in Table 1. For $a_1 = -0.8$, both Corollary 2 and [31] work, and Corollary 2 results in a smaller ADT. For $a_1 = 1.4$, the performance of the subsystem (A_1, B_1) is worse. In this situation, Corollary 2 still works while [31] does not. Roughly speaking, this is because the stability conditions of Theorem 2 and Corollary 2 contain more information about the delay. In fact, (51) indicates that all eigenvalues of $\bar{A}_u + \bar{B}_u K_v R_i$, $\forall\, u, v \in \mathscr{M}$, $i \in \mathscr{S}$ are lower than α', that is, each controller K_v can exponentially stabilize any subsystem with each delay satisfying $i \le d$. This can be seen as a special case of Corollary 2. For the two case, applying the different designed controllers, we obtain the state trajectories with initial state $\phi(-2) = \phi(-1) = \phi(0) = [3\ -5]^T$ shown in Figs. 4 and 5 by simulation. In Fig. 4, the simulation is performed with the parameters $a_1 = -0.8$ and $a_2 = -10$. Under the same switching signal with ADT $\widetilde{\tau}_a = 0.4s$, both the two controllers stabilize the switched system. In Fig. 5, the simulation is performed with the parameters $a_1 = 1.4$ and $a_2 = -10$. Given the switching signal with ADT $\widetilde{\tau}_a = 0.3s$, the controller designed by

Table 1
Computation results for the system under two different stabilization schemes.

		ref. [31] with$\alpha' = 0.078$	Corollary 2 with $\alpha = 0.15$
$a_1 = -0.8 a_2 = -10.0$	K_1	$[-5.5693 \ -5.9496]$	$[-5.1426 \ -10.4342]$
	K_2	$[-2.9575 \ -4.2115]$	$[-4.3008 \ -10.8899]$
		$\mu' = 1.1683 \ \tilde{\tau}_a^* = 0.3831s$	$\mu = 1.03 \ \tilde{\tau}_a^* = 0.0546s$
$a_1 = 1.4 a_2 = -10.0$	K_1	–	$[-16.6732 \ -11.9439]$
	K_2	–	$[-14.4134 \ -14.3198]$
		–	$\mu = 1.15 \ \tilde{\tau}_a^* = 0.2580s$

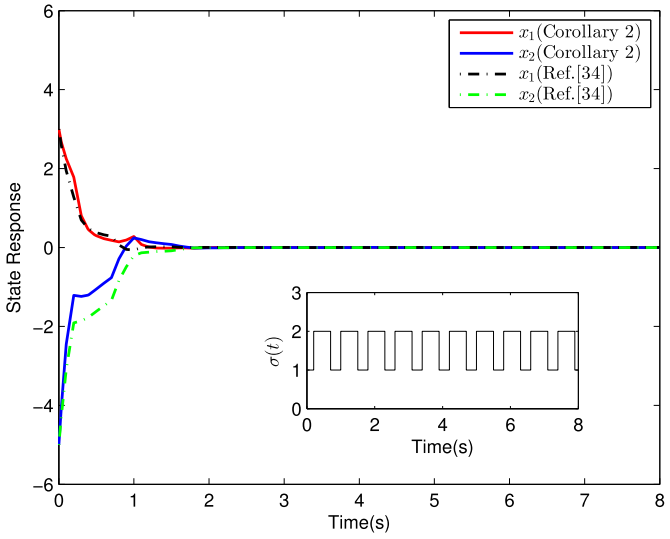

Fig. 4. State response of the closed-loop system with two different controllers when $a_1 = -0.8$, $a_2 = -10.0$ and ADT switching with $\tilde{\tau}_a = 0.4s$.

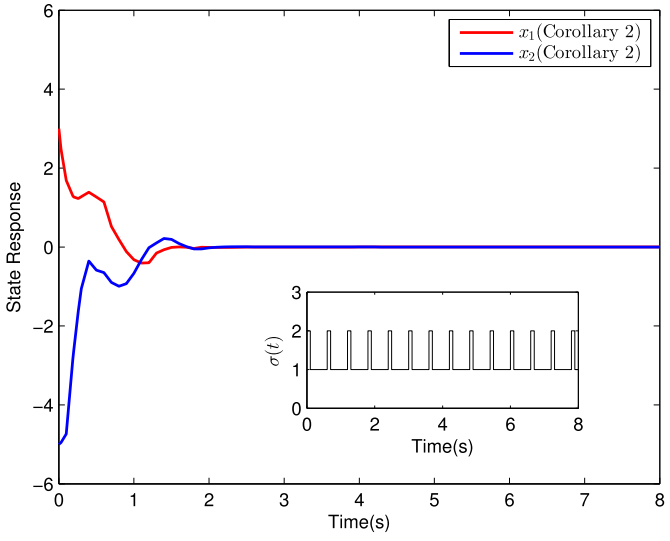

Fig. 5. State response of the closed-loop system with controller designed by Corollary 2 when $a_1 = 1.4$, $a_2 = -10.0$ and ADT switching with $\tilde{\tau}_a = 0.3s$.

Corollary 2 can still stabilize the switched system. Therefore, we can conclude that Corollary 2 is a more general result.

For the second goal, we consider $a_1 = 1.4$ and $a_2 = -2.0$. In this scenario, both A_1 and A_2 are not Hurwitz stable. Furthermore, Corollary 2 fails to find any feasible solutions, with even $\mu = 100$ and $\alpha = 0$. Therefore, Theorem 3 and Corollary 3 are adopted to design the controller and the switching signal. For $\alpha^+ = 0.60$, $\alpha^- = 0.15$ and $\mu = 1.02$, Corollary 3 gives the control gains as follows

$K_1 = [-20.0457 \quad -21.1774]$, $K_2 = [-32.6027 \quad 10.1869]$.

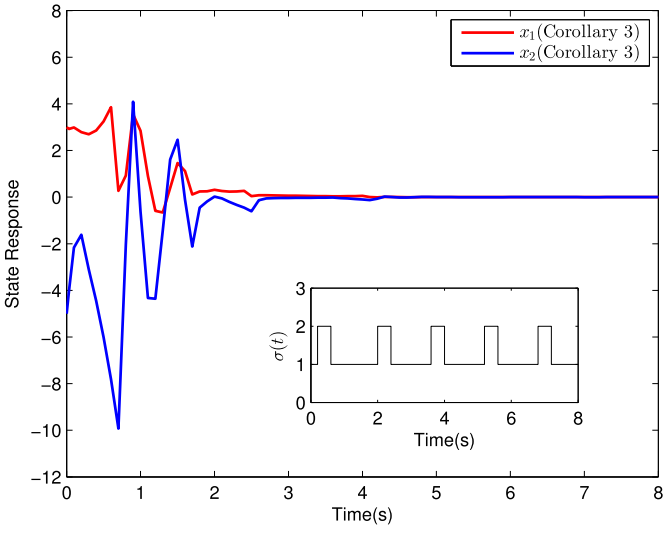

Fig. 6. State response of the closed-loop system with controller designed by Corollary 3 when $a_1 = 1.4$, $a_2 = -2.0$ and ADT switching with $\tilde{\tau}_a = 0.8s$.

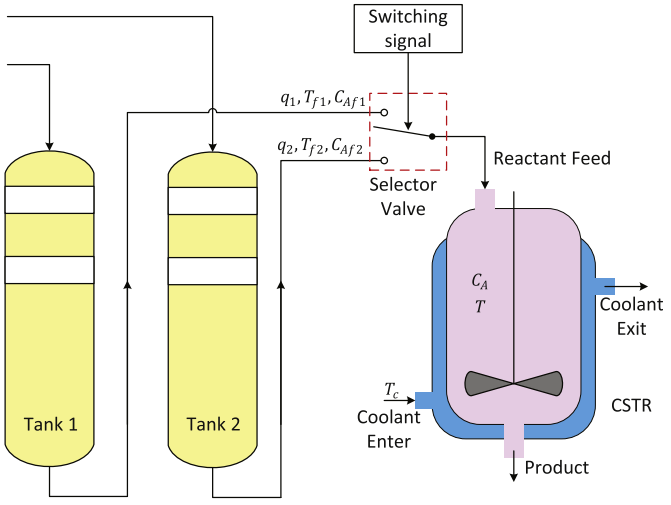

Fig. 7. Schematic diagram of the process.

The ADT is $\tau_a^* = -\frac{3 \ln 1.02}{\ln 0.85} = 0.3655$. However, in order to stabilize the closed-loop systems, (45) should be satisfied. Take the switching signal (shown in Fig. 6) with $\tilde{\tau}_a = 0.8s$, then (45) can be satisfied with $k'_0 = 8$ and $a = 0.9900$. Under this switching signal and the realization of Markovian delay shown in Fig. 3 the corresponding state trajectories can be seen in Fig. 6. Because unstable subsystems are allowed, the state response has large overshoot, especially for the large delay and frequent switching that will enlarge the asynchronous interval.

Example 2. We apply our proposed method to a continuous stirred tank reactor (CSTR) as shown in Fig. 7, a widely used test rig for switched control systems [39,40]. the CSTR has a constant volume and is fed by a

single inlet stream through a selector valve connected to two different source streams. In Ref. [39], the CSTR is modeled as a switching nonlinear system

$$\begin{aligned}\dot{C}_A &= \tfrac{q_i}{V}(C_{Afi} - C_A) - a_0 e^{-\frac{E}{RT}} C_A \\ \dot{T} &= \tfrac{q_i}{V}(T_{fi} - T) - a_1 e^{-\frac{E}{RT}} C_A + a_2 (T_c - T)\end{aligned} \tag{53}$$

We keep using the same symbols and the nominal values as in Ref. [39]. In particular, the nominal operating conditions, including the coolant temperature, the concentration of reactant A and the reactor temperature, are $T_c^* = 300\,K$, $C_A^* = 0.5$ mol/L and $T^* = 350$ K for both modes, respectively.

Our aim is to regulate C_A and T to their nominal values in the networked control framework by manipulating T_c and adjusting the selector valve according to the designed switching signal. In Ref. [39], by changing of variables and using the modal state feedback linearization method, a switching linear system is obtained

$$\Sigma_1: \begin{cases} \dot{z}_1 = 0.5 z_1 + z_2 \\ \dot{z}_2 = u \end{cases} \qquad \Sigma_2: \begin{cases} \dot{z}_1 = 2 z_1 + z_2 \\ \dot{z}_2 = u \end{cases} \tag{54}$$

where z_1, z_2 and u are defined in Ref. [39]. Notice that the stability of the switched system (54) implies the stability of system (53). By discretization with $T = 0.2$s, we obtain the discrete-time switching linear system with

$$A_1 = \begin{bmatrix} 1.1052 & 0.2103 \\ 0 & 1.0000 \end{bmatrix}, \quad A_2 = \begin{bmatrix} 1.4918 & 0.2459 \\ 0 & 1.0000 \end{bmatrix},$$
$$B_1 = \begin{bmatrix} 0.0207 \\ 0.2000 \end{bmatrix}, \quad B_2 = \begin{bmatrix} 0.0230 \\ 0.2000 \end{bmatrix}$$

where two system matrices A_1 and A_2 have eigenvalues out of unit circles. Assume that the random input delay $r(k) \in \{0, 1, 2\}$ and the transition probability matrix Π is the same as in the previous example. Supposed that the initial states are $[C_A(0), T(0)] = [0.6\,\text{mol}/L, 330\,\text{K}]$, which means the initial states of the switched system (54) are $[z_1(0), z_2(0)] = [0.1, 0.3681]$.

For the synchronous case where the coolant inlet select the temperature of coolant according to the selected tank, Corollary 1 is used to design the mode-dependent controller. Given $\mu = 1.1$ and $\alpha = 0.1$, we obtain the following mode-dependent controller

$$K_1 = [-2.4965 \quad -2.3385], \quad K_2 = [-6.0065 \quad -2.8520]$$

and then the ADT can be calculated as $\tau_a^* = -\frac{\ln \mu}{\ln(1-\alpha)} = 0.9046$, i.e., $\widetilde{\tau}_a^* = 0.9046 \times 0.2s \approx 0.18s$. Take the switching signal shown in Fig. 8 with $\widetilde{\tau}_a = 0.23s$, the controller designed by Corollary 1 can stabilize the switched system (54) or (53) in the synchronous control scheme. In order to put the state responses in one figure, we use z_1 and z_2 instead of the true states C_A and T.

For the asynchronous case, although Corollary 2 gives a feasible solution when $\mu = 3.9$ and $\alpha = 0.1$, the ADT $\tau_a^* = -3\frac{\ln(\mu)}{\ln(1-\alpha)} \approx 38.75$ ($\widetilde{\tau}_a^* \approx 7.75s$) seems too large. Thus, we resort to Corollary 3 to find a feasible solution with smaller ADT. Given $\mu = 1.32$, $\alpha^- = 0.1$ and $\alpha^+ = 0.37$, Corollary 3 yields the following control gains

$$K_1 = [-5.0875 \quad -2.9113], \quad K_2 = [-6.8642 \quad -3.1870]$$

Then, the ADT is $\widetilde{\tau}_a^* = 1.58s$. Given $\alpha = 0.9995$, and design a switching signal with $\widetilde{\tau}_a = 3.2s$, then (45) will be satisfied with some k_0'. Note that in Fig. 9, the given switching signal meets (45) with $k_0' = 14$. Fig. 9 shows the state responses under the synchronous and asynchronous control schemes with the same switching signal. From Figs. 8 and 9, we can conclude that the synchronous control scheme not only results in rapid convergence, but also guarantees stability under the switching signal with smaller ADT.

5. Conclusion

The stabilization problem for a class of switched linear system in networked environment is investigated, and the stability criteria of EMSS for sampled-data synchronous and asynchronous switched system with Markovian delay are derived. Then, corresponding mode-dependent state-feedback controller and switching signal design methods are proposed. Our future work will focus on the case in the absence of Assumption 1 as well as the nonlinear switched systems.

Appendix

For simplicity, let $P_{mi} = P(m, i)$, $Z_{mi} = Z(m, i)$, and define

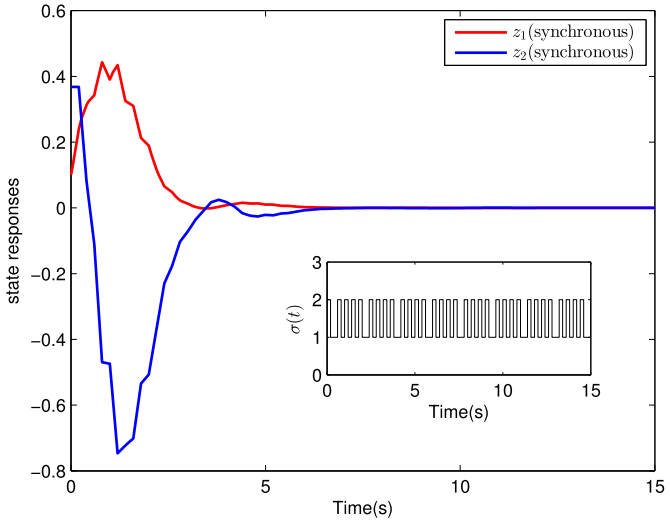

Fig. 8. State responses of closed-loop system (54) under ADT switching with $\widetilde{\tau}_a = 0.23s$.

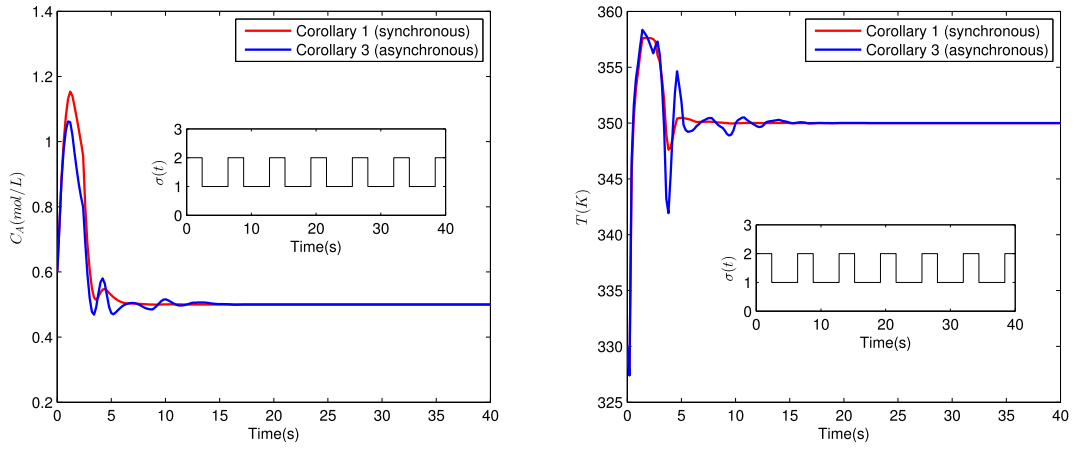

Fig. 9. Switching signal and state responses of closed-loop system (53) under the synchronous and asynchronous control schemes.

$$\widetilde{P}_{mi} = :\widetilde{P}(m, i) = \sum_{j=0}^{d} \pi_{ij} P_{mj},$$

Define an LMI as follows

$$\begin{bmatrix} \widetilde{P}_{mi} & I \\ * & Z_{mi} \end{bmatrix} \geq 0, \tag{55}$$

then, the CCL algorithm flowchart for Corollary 1 can be shown in Fig. 10.

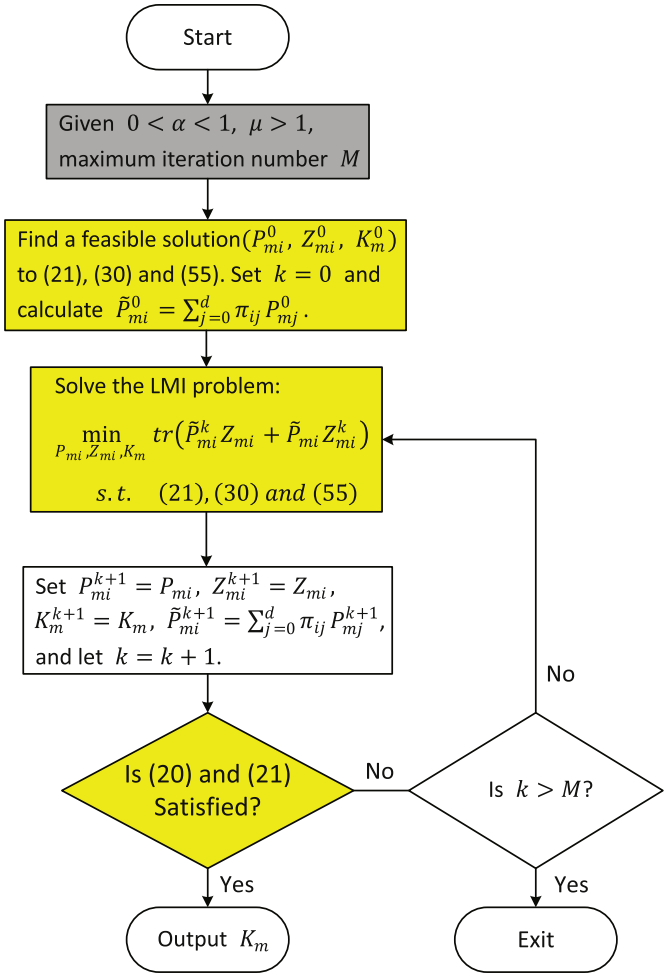

Fig. 10. CCL algorithm for Corollary 1.

The algorithm flowchart illustrated in Fig. 10 also applies mutatis mutandis to Corollary 2 and Corollary 3. To be specific, for Corollary 2, one needs replace Equations (20), (21) and (30) in yellow blocks by (35), (36) and (43), respectively. For Corollary 3, one needs to replace $0 < \alpha < 1$ in

the grey block by $0 < \alpha^- < 1$, $\alpha^+ > 0$, and replace (20), (21) and (30) in the yellow blocks by (44), (36) and (50), respectively.

References

[1] Liberzon D, Morse AS. Basic problems in stability and design of switched systems. IEEE Contr Syst Mag 2001;19(5):59–70.
[2] Lin H, Antsaklis PJ. Stability and stabilizability of switched linear systems: a survey of recent results. IEEE Trans Automat Contr 2009;54(2):308–22.
[3] Kang Y, Zhai D, Liu G, Zhao Y, Zhao P. Stability analysis of a class of hybrid stochastic retarded systems under asynchronous switching. IEEE Trans Automat Contr 2014;59(6):1511–23.
[4] Kang Y, Zhai D, Liu G, Zhao Y. On input-to-state stability of switched stochastic nonlinear systems under extended asynchronous switching. IEEE Trans Cybern 2016;46(5):1092–105.
[5] Zhang L, Gao H. Asynchronously switched control of switched linear systems with average dwell time. Automatica 2010;46(5):953–8.
[6] Hespanha JP, Naghshtabrizi P, Xu Y. A survey of recent results in networked control systems. Proc IEEE 2007;95(1):138–62.
[7] Gupta RA, Chow M. Networked control system: overview and research trends. IEEE Trans Ind Electron 2010;57(7):2527–35.
[8] Park P, Ergen SC, Fischione C, Lu C, Johansson KH. Wireless network design for control systems: A survey,. IEEE Commun Surv Tutor 2018;20(2):978–1013.
[9] Zhang L, Gao H, Kaynak O. Network-induced constraints in networked control systems - a survey. IEEE Trans Ind Info 2013;9(1):403–16.
[10] Liu A, Yu L, Zhang W. One-step receding horizon $H\infty$ control for networked control systems with random delay and packet disordering. ISA (Instrum Soc Am) Trans 2011;50(1):44–52.
[11] Liu A, Zhang W, Yu L, Liu S, Chen MZ. New results on stabilization of networked control systems with packet disordering. Automatica 2015;52:255–9.
[12] Xiong J, Lam J. Stabilization of networked control systems with a logic ZOH. IEEE Trans Automat Contr 2009;vol. 54(2):358–63.
[13] Liberzon D. Finite data-rate feedback stabilization of switched and hybrid linear systems. Automatica 2014;50(2):409–20.
[14] Xiong J, Lam J. Stabilization of discrete-time markovian jump linear systems via time-delayed controllers. Automatica 2006;42(5):747–53.
[15] Liu M, Ho DW, Niu Y. Stabilization of Markovian jump linear system over networks with random communication delay. Automatica 2009;45(2):416–21.
[16] Ma D, Zhao J. Stabilization of networked switched linear systems: an asynchronous switching delay system approach. Syst Contr Lett 2015;77:46–54.
[17] Guan Z, Zhang H, Yang S. Robust passive control for Internet-based switching systems with time-delay. Chaos, Solit Fractals 2008;36(2):479–86.
[18] Ma D, Liu J. Robust exponential stabilization for network-based switched control systems. Int J Contr, Automat Syst 2010;8(1):67–72.
[19] Liu H. Mode-dependent event-triggered control of networked switching Takagi-Sugeno fuzzy systems. IET Control Theory & Appl 2016;10(6):711–6.
[20] Park M, Kwon O, Choi S. Stability analysis of discrete-time switched systems with time-varying delays via a new summation inequality. Nonlin Anal: Hybrid Syst 2017;23:76–90.
[21] Koru AT, Delibaşı A, Özbay H. Dwell time-based stabilisation of switched delay systems using free-weighting matrices. Int J Contr 2018;91(1):1–11.
[22] Mao Y, Zhang H, Xu S. The exponential stability and asynchronous stabilization of a class of switched nonlinear system via the T-S fuzzy model. IEEE Trans Fuzzy Syst 2014;22(4):817–28.
[23] Wakaiki M, Yamamoto Y. Stability analysis of sampled-data switched systems with quantization. Automatica 2016;69:157–68.
[24] Shokouhi-Nejad H, Ghiasi AR, Badamchizadeh MA. Robust simultaneous fault detection and control for a class of nonlinear stochastic switched delay systems under asynchronous switching. J Franklin Inst 2017;354(12):4801–25.
[25] H. Ren, G. Zong, T. Li, Event-triggered finite-time control for networked switched linear systems with asynchronous switching, IEEE Trans Syst Man Cybern: Systems, to be published, http://dx.doi.org/10.1109/TSMC.2017.2789186.
[26] Li T-F, Wang H. Asynchronous switching control for switched delay systems induced by sampling mechanism. IEEE Access 2017;6:10787–94.
[27] Sakthivel R, Santra S, Mathiyalagan K, Anthoni SM. Observer-based control for switched networked control systems with missing data. Int J Mach Learn Cybern 2015;6(4):677–86.
[28] Tian E, Hu Y, Luo Y. Sojourn-probability-dependent $H\infty$ control for networked switched systems under asynchronous switching. Int J Syst Sci 2017;48(2):357–66.
[29] D. Zhai, A. Lu, J. Dong, Q. Zhang, Adaptive tracking control for a class of switched nonlinear systems under asynchronous switching, IEEE Trans Fuzzy Syst, to be published, http://dx.doi.org/10.1109/TFUZZ.2017.2718486.
[30] Nešić D, Teel AR, Sontag ED. Formulas relating ${\mathcal{KL}}$ stability estimates of discrete-time and sampled-data nonlinear systems. Syst Contr Lett 1999;38(1):49–60.
[31] Zhao X, Shi P, Zhang L. Asynchronously switched control of a class of slowly switched linear systems. Syst Contr Lett 2012;61(12):1151–6.
[32] Zhang H, Xie D, Zhang H, Wang G. Stability analysis for discrete-time switched systems with unstable subsystems by a mode-dependent average dwell time approach. ISA (Instrum Soc Am) Trans 2014;53(4):1081–6.
[33] Desoer CA, Vidyasagar M. Feedback systems: input-output properties. PA, USA: SIAM; 2009.
[34] Tanelli M, Picasso B, Bolzern P, Colaneri P. Almost sure stabilization of uncertain continuous-time Markov jump linear systems. IEEE Trans Automat Contr 2010;55(1):195–201.
[35] Zheng Y, Fang H, Wang HO. Takagi-sugeno fuzzy-model-based fault detection for networked control systems with markov delays. IEEE Trans Syst Man Cybern Part B (Cybern) 2006;36(4):924–9.
[36] Zhai G, Hu B, Yasuda K, Michel AN. Stability analysis of switched systems with stable and unstable subsystems: an average dwell time approach. Int J Syst Sci 2001;32(8):1055–61.
[37] El Ghaoui L, Oustry F, AitRami M. A cone complementarity linearization algorithm for static output-feedback and related problems. IEEE Trans Automat Contr 1997;42(8):1171–6.
[38] Gao H, Chen T. Network-based $H\infty$ output tracking control. IEEE Trans Automat Contr 2008;53(3):655–67.
[39] Yazdi MB, Jahed-Motlagh M. Stabilization of a cstr with two arbitrarily switching modes using modal state feedback linearization. Chem Eng J 2009;155(3):838–43.
[40] Li J, Yang G-H. Asynchronous fault detection filter design approach for discrete-time switched linear systems. Int J Robust Nonlinear Control 2014;24(1):70–96.